FOUNDATION BASES

ground bearing
the ground slab of the m.o.t service station is currently in-situ and a scheme has been designed to ensure stabilisation of the service station (refer to drawing number MR/1241/02).

foundation levels
to be shown on this drawing or as determined on site by the contractor in conjunction with the local authority building inspector.

structural concrete mix (C35)
all concrete used in the foundation bases and ground beams is to have a minimum crushing strength at 28 days of 35n/mm2
cement to be o.p.c. with 330kg/m3
maximum aggregate size = 20 mm

mass concrete (C10)
any mass concrete placed under the bases and ground slab is to have a minimum crushing strength at 28 days of 10n/mm2
cement to be o.p.c. with 180kg/m3

reinforcement
all reinforcing bars to foundation bases for stanchions to be high tensile type 2 unless otherwise stated.

reinforcement cover
to be a minimum of 50 mm to any reinforcement

grouting under stanchions
the civil contractor is to fully grout under all stanchion baseplates and holding down bolt pockets.

stanchion base foundations to be of 1000 mm x 1000 mm x 600 mm deep and 500 mm below ffl. the stachion bases are to be of C35 grade mass concrete.

GROUND FLOOR SLAB

slab
to be of 250 mm overall thickness reinforced insitu concrete with a power float finish.

slab reinforcement
one layer of B785 mesh in bottom face - 50 mm cover
one layer of B785 mesh in top face - 50 mm cover
minimum lap length for both meshes = 400 mm

reinforcement positioning
accurate placing of mesh is to be achieved using chair supports.

dpm
one layer of 1200 guage polythene with 300 mm laps and dpm to be taken up slab edge and built into the outer leaf.

sub-base
minimum overall compacted thickness to be 250 mm to comprise dot granular sub-base material type 1 to be well compacted using a vibratory roller. top surface blinded with sand to be a smooth level surface.

sub-grade
top surface to be well rolled using a vibratory roller.
any soft spots to be removed and replaced with sub base material and well compacted.

concrete mixes
all concrete used in the floor slab is to have a minimum crushing strength at 28 days of 35n/mm2
cement to be o.p.c. with 330kg/m3
maximum aggregate size = 20 mm

STRUCTURAL STEELWORK

general
all structural steelwork is to be of grade S275 (compact). structural steel frame to be constructed of 203 mm x 102 mm x 23 kgs U.B.

galvanised press metal members
all purlins, rails, eaves beams etc to be supplied bywards or equivalent.

beam connections
unless shown otherwise, connections are to have end plates minimum 15 mm thick or thickness of beam flange, whichever is the greater and 4 No. 20 mm dia. grade 8.8 bolts.

bracing connections
all bracing member end connections to be capable of an unfactored load of 50kn and to have a minimum of 2 No. 20 mm dia grade 8.8 bolts. wind bracing members to be of 75 mm (CHS) centre hollow section with 8 mm fixing plates.

cladding supports
the steelwork fabricator is to allow for all supports for sheeting and flashings around the stanchions, eaves, fascias, soffits and masonry walls on each side.

stanchion bases
unless shown otherwise, to be of 20 mm thick base plates with 4 No. 20 mm dia. grade 8.8 bolts x 300 mm in length with 100 mm x 100 mm x 8 mm washer plates. base plates of stanchions to be 300 mm x 300 mm x 20 mm thick.

door frame
to be of 100 mm x 100 mm x 5 kgs (RHS) hollow section

welds
all welds to be a minimum of 8 mm fillet and full profile unless shown otherwise

bolts
all to be 20 mm dia grade 8.8 unless shown otherwise.

holding down bolts
the steelwork fabricator is to supply all holding down bolts and washer plates.

holding down bolt layout
the steelwork fabricator is to supply to the civil contractor a drawing showing the position of bolts relative to the grid lines.

roller shutter doors
the steelwork fabricator is to allow for any additional steelwork not shown on this drawing to facilitate the fixing and operation of the doors. actual detail to suit door supplier selected.

fabrication drawings
the steelwork contractor is to prepare all details fabrication drawings required for the building.

ACCESS & EGRESS OF BUILDING

1200 mm x 1200 mm level landing clear of door swing to be provided to rear fire exit door. a 1200 mm wide sealed / paved path is to lead from the rear fire escape along the southern facing elevation to the car park and assembley area

a maximum threshold of 15 mm is to be in place to all landings for access and egress of the building. any element above 5 mm chamfered or rounded.

principal entrance door (roller shutter).

to have a clear opening width of 4000 mm with a clear opening height of 3500 mm.

fire exit door to rear.

to have a clear opening of 1000 mm and to be of a flush plywood external door in a softwood frame.

to be outward opening fitted with push bar only (no locks).

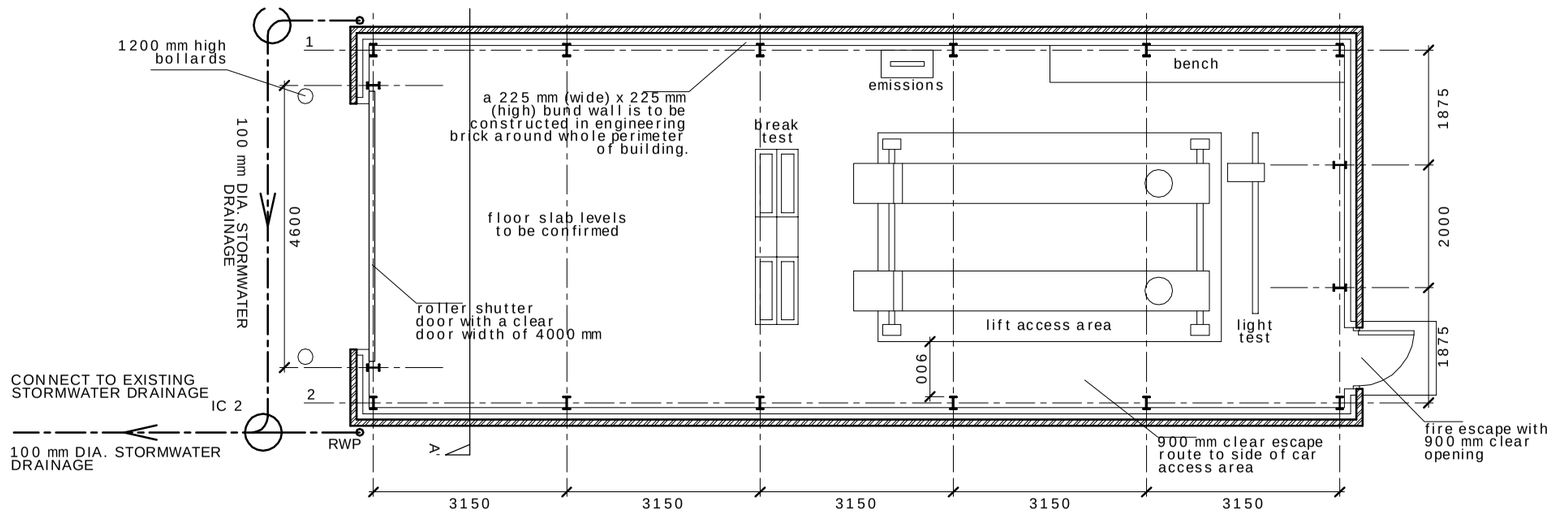

PROPOSED FLOOR PLAN
SCALE 1 : 100

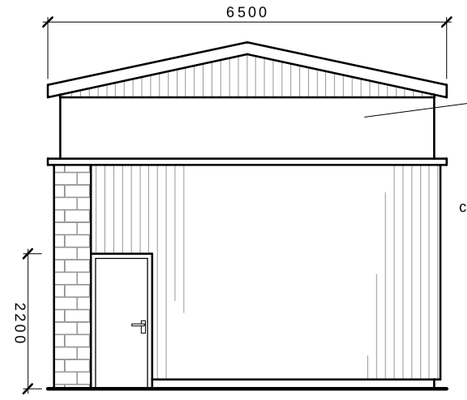

PROPOSED ELEVATION (EAST FACING)
SCALE 1 : 100

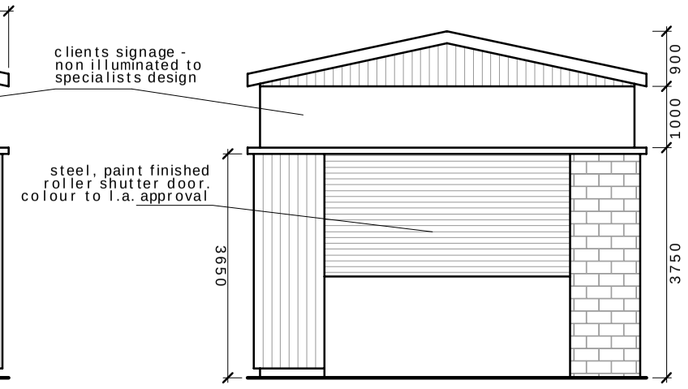

PROPOSED ELEVATION (WEST FACING)
SCALE 1 : 100

roof cladding.

weather sheet to be plastisol coated galvanised metal sheets, 0.70 mm thick with inner sheet of 0.40 mm liner tray with all laps sealed with 50 mm wide foil tape.

spacer bars and non - combustible insulations quilt to fully fill the cavity between sheets. breather membrane to be laid over top insulation.

all cladding to be fixed to manufacturers instrucitons and be completely watertight.

u-value : 0.25W/M2K
cladding classification : aa.

roof lights are not to exceed 20% of the roof area and to consist of double skin translucent sheets with saa class 1 inner sheet and saa 3 weather sheet.

u-value : 3.2W/M2K
rooflight designation : aa.

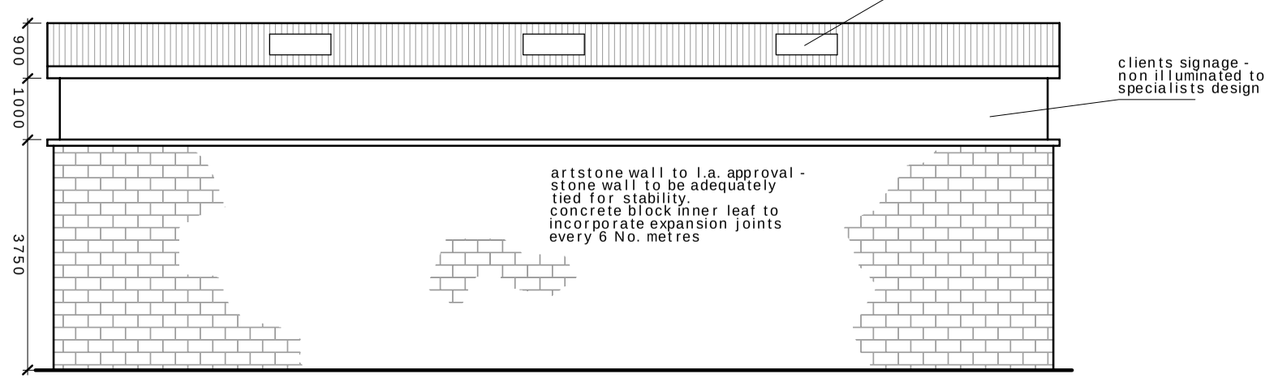

PROPOSED ELEVATION (SOUTH FACING)
SCALE 1 : 100

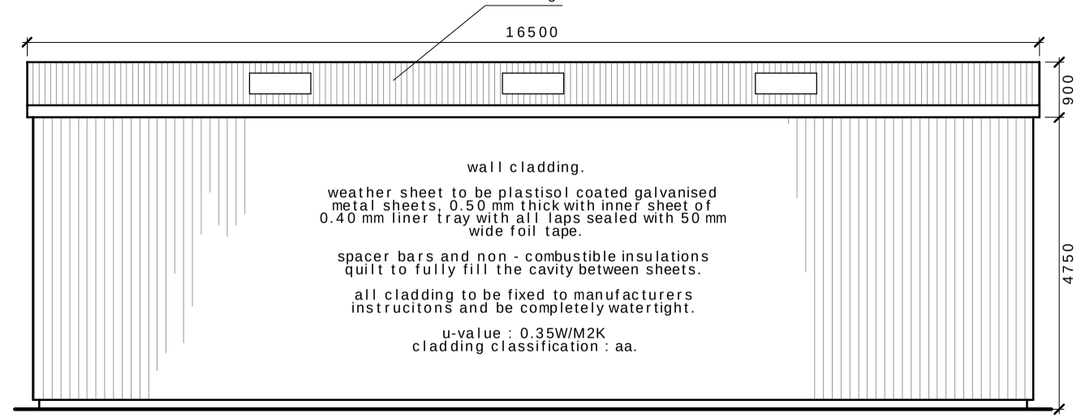

PROPOSED ELEVATION (NORTH FACING)
SCALE 1 : 100

CLADDING

wall and roof cladding is to have a minimum fire resistance of one hour.

sheeting rails to have slotted connections and plastic washers etc.

proposed wall and roof cladding colour is to be agreed with the local authority.

wall cladding.

weather sheet to be plastisol coated galvanised metal sheets, 0.50 mm thick.

inner sheet to be of 0.40 mm liner tray with all laps sealed with 50 mm wide foil tape.

spacer bars and non - combustible insulations quilt to fully fill the cavity between sheets.

all cladding to be fixed to manufacturers instrucitons and be completely watertight.

u-value : 0.35W/M2K
cladding classification : aa.

roof cladding.

weather sheet to be plastisol coated galvanised metal sheets, 0.70 mm thick.

inner sheet to be of 0.40 mm liner tray with all laps sealed with 50 mm wide foil tape.

spacer bars and non - combustible insulations quilt to fully fill the cavity between sheets.

breather membrane to be laid over top insulation.

all cladding to be fixed to manufacturers instrucitons and be completely watertight.

u-value : 0.25W/M2K
cladding classification : aa.

roof lights.

not to exceed 20% of the roof area.

to consist of double skin translucent sheets with saa class 1 inner sheet and saa 3 weather sheet.

u-value : 3.2W/M2K
rooflight designation : aa.

NOTE:

at the support of the gable walls, a single additional layer of B785 mesh is to be placed at the bottom of the slab, extending 1400 mm inside the walls. the mesh is to have a minimum of 50 mm cover from the bottom face.

refer to structural engineers calculations

RAINWATER GOODS

external gutters to be of galvanised plastisol coated press metal - 200 mm deep x 200 mm wide - colour to match cladding sheets

weirs are to be fitted at each end of gutters.

110 mm outlets and 110 mm dia downpipes are to be connected to surface water system.

downpipes to be of upvc manufacture and in grey or black.

the rainwater drainage is to be connected into the existing rainwater drainage system for discharge.

UNDERGROUND DRAINAGE

all to be 100 mm dia. glazed ware drainage unless shown otherwise. the drainage is to be bed on pea gravel.

surface water drains to have a min. fall of 1 in 80

all drains to have flexible joints and inspection chambers to be encased within 150 mm concrete.

ELECTRICAL INSTALLATIONS

all electrical works are to be carried out in accordance with approved document p of the building regulations, together with BS 7671 and the current iee regulations.

LIGHTING

all areas to have high efficiency lighting with local switching in accordance with part L2 of the building regulations.

internal lighting shall have an initial effiniency average of 40 luminare - lumens / circuit - watt.

STEELWORK FIRE PROTECTION

all steelwork, including stanchions, eaves beams and eaves rafters are to be given a minimum one hour fire protection in accordance with approved document b of the building regulations. the system to be used may be of a board system that shall be fixed in accordance with the manufacturers instructions or intumescent paint applied in conjunction with the manufacturers instructions.

OTHER FIRE RELATED MATTERS

emergency lighting & signage.

to be installed internally and externally over all fire exits and to external fire escape routes.

the emergency lighting is to be in accordance with approved document b of the building regulations and BS 5266 : PART 1.

upon completion, the installer is to certify the installation and submit the certificate to the building inspector.

all escapes are to be adequately and conspicuously marked up and all emergency signage is to be in accordance with BS 5499 : PART 1.

the signage should be of adequate size and in accordance with the Health & Safety (Safety signs and signals) Regulations 1996.

fire extinguishes.

hand held fire extinguises are to be provided adjacent to door openings in conspicuous positions on brackets or stands.

the first aid fire fighting equipment are to be provided in accordance with approved document b of the building regulations and dfee publications.

fire proceedure notices.

fire proceedure notices are to be provided in conspicuous positions adjacent to each door opening and above the work bench.

fire alarm.

a type P2 alarm or other if agreed otherwise with the building control officer system is to be installed conforming BS 5839 : part 1. upon completion the installer is to certify the installation and submit the certificate to the building inspector.

fire alarm call points.

to be installed adjacent to each door opening and above the work bench.

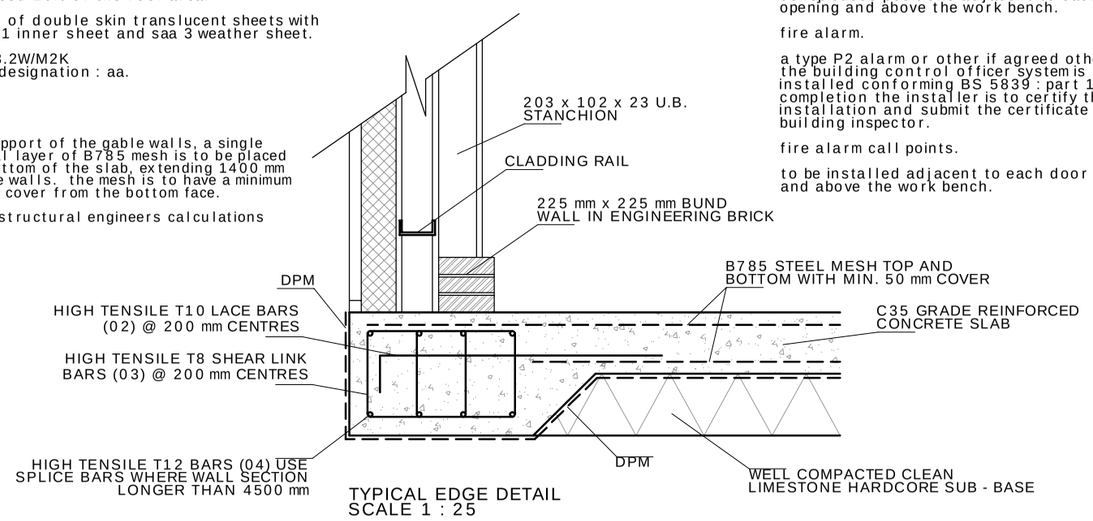

TYPICAL EDGE DETAIL
SCALE 1 : 25

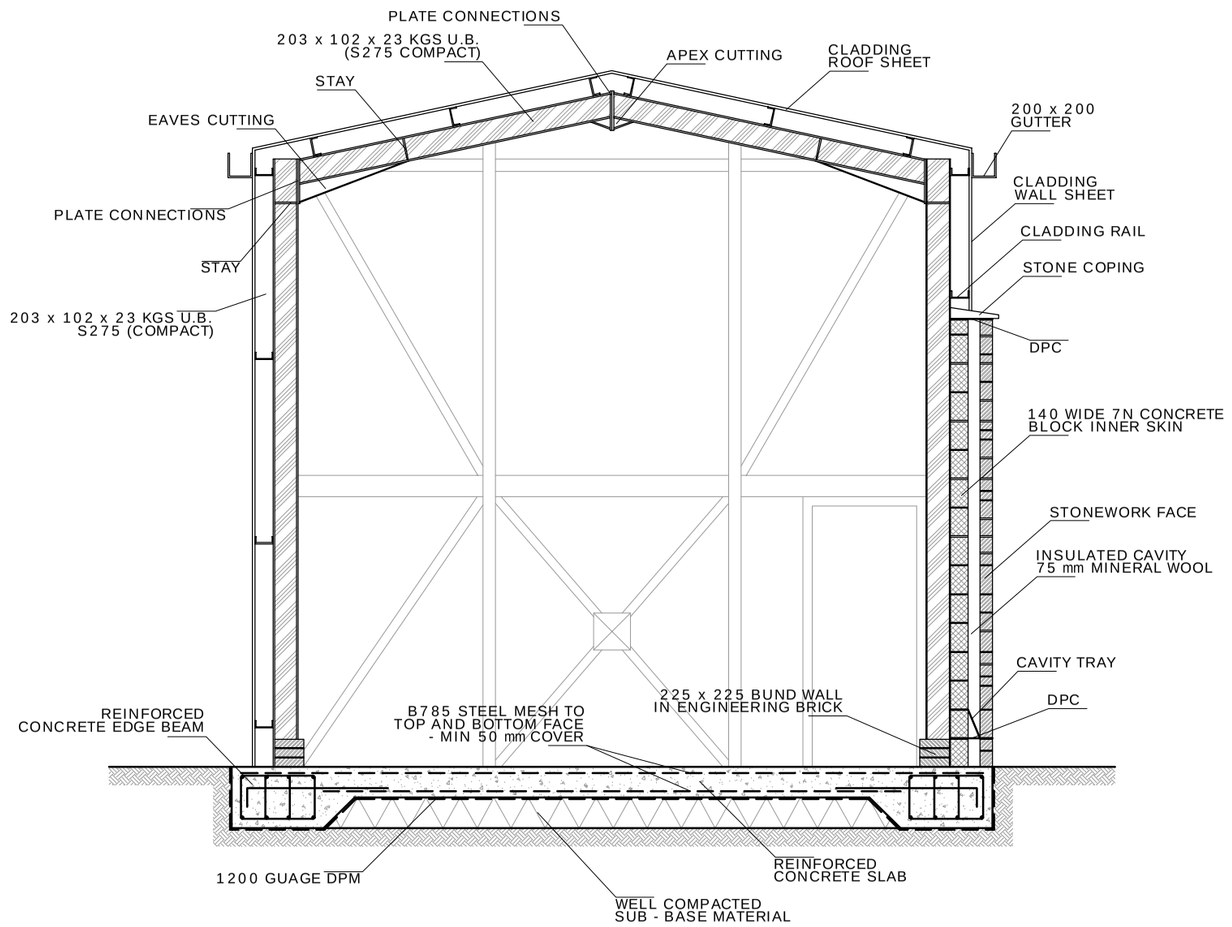

TYPICAL THRU' SECTION A - A'
SCALE 1 : 50

Revisions

Rev.	Date	Description	By

Do Not Scale From This Drawing For Construction Purposes

All Dimensions Are In mm Unless Otherwise Stated

All Dimensions Must Be Checked & Verified By The Contractor Prior To Commencing Work

All Work Must Be To The Satisfaction Of The Building Control Officer / Inspector

S P J Simmonds Consulting Ltd
A S P J Simmonds Consulting Ltd
1 Clarke Hall Farm
Aberford Road
Wakefield
West Yorkshire
WF1 4AL

Building Regulations

Client

Site Name

Project Title
Proposed New M.O.T Facility

Drawing Title
Proposed Elevations & Floor Layout and Proposed Section & Foundation Detail

Paper Size	Scale	Drawn By	Checked
A2	As Shown	SS	SS
Drawing No.	Project No.	Date	Revision
SPJS/1451/01	SPJS/1451	19.12.2010	